SISU-SAUNA

S2G1.LED-AI01

1

1	SG1-LED01A-01	pcs 2	9	NailBrace4	pcs 10
2	SG1-LED01A-02	2	10	Screw 3x25	14
3	SG1-LED01A-03	2			
4	PowerSupply02	1			
5	SwitchBox04	1			
6	ElConnector02	2			
7	Cable02	1			
8	ElectricPlug3	1			

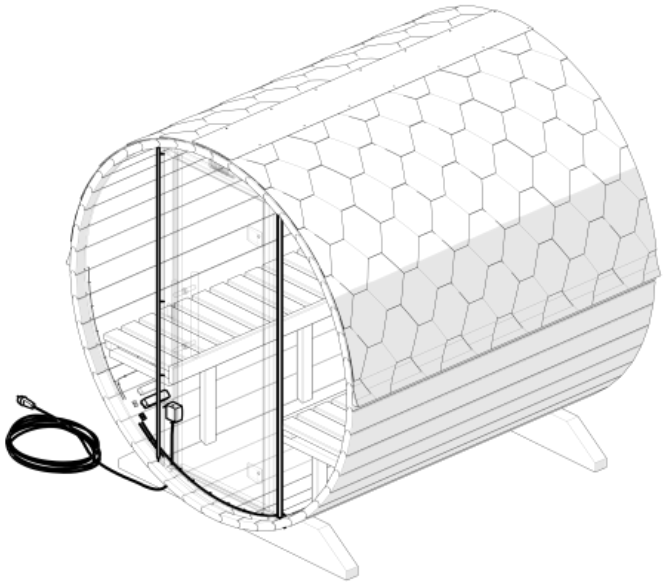

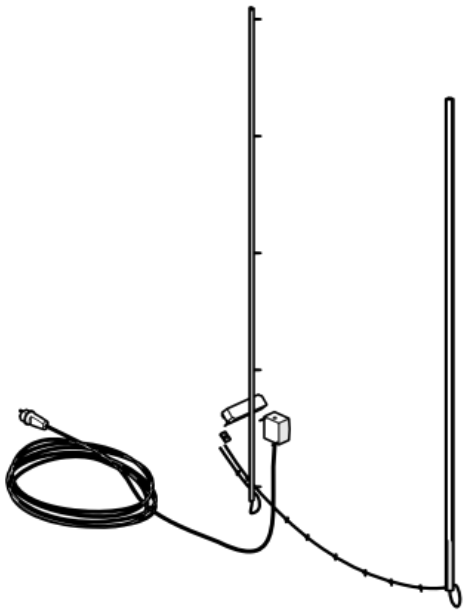

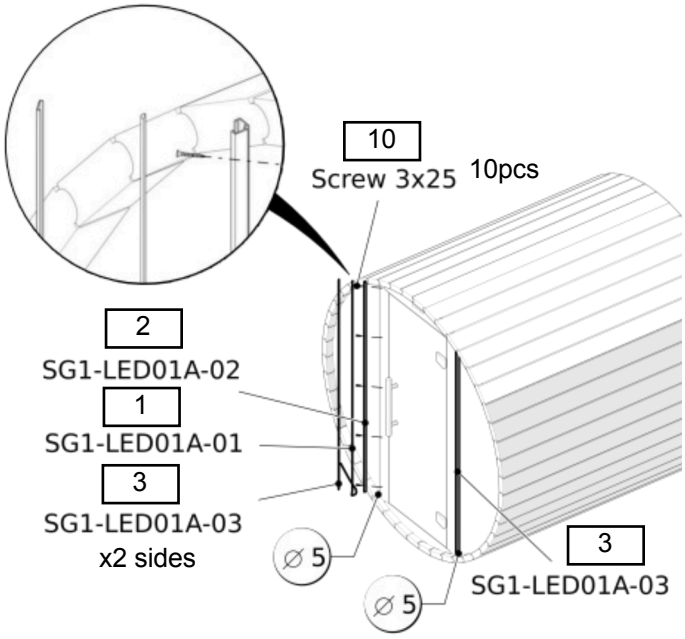
10
Screw 3x25
10pcs
2
SG1-LED01A-02
1
SG1-LED01A-01
3
SG1-LED01A-03
x2 sides
⌀ 5
⌀ 5
3
SG1-LED01A-03

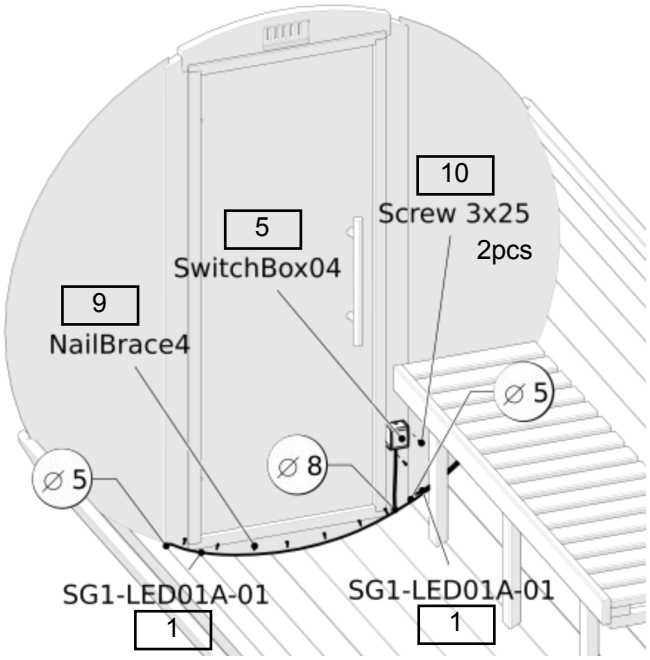
10
Screw 3x25
2pcs
5
SwitchBox04
9
NailBrace4
⌀ 5
⌀ 8
⌀ 5
SG1-LED01A-01
1
SG1-LED01A-01
1

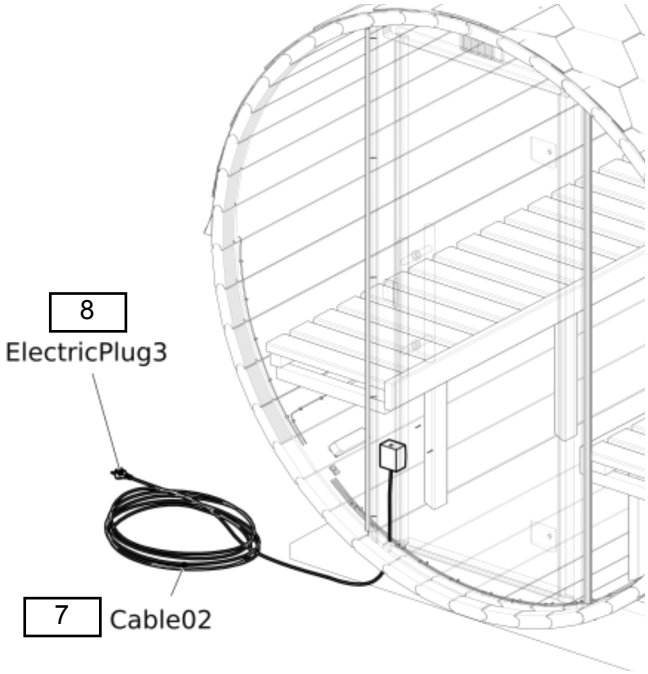
8
ElectricPlug3
7
Cable02

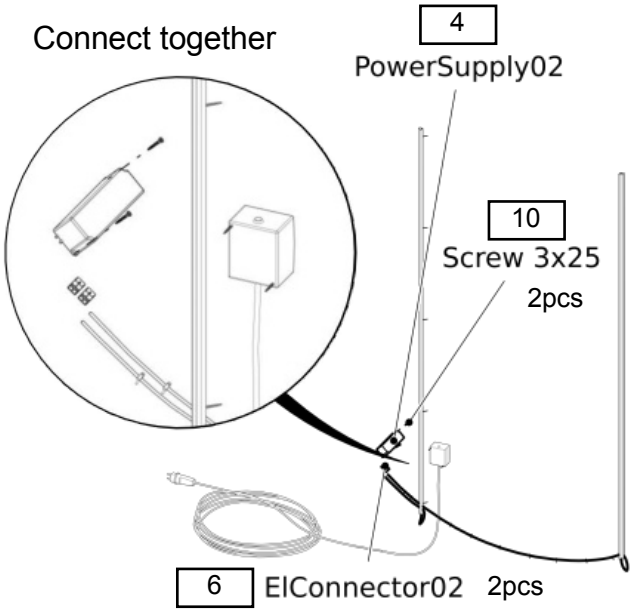
Connect together
4
PowerSupply02
10
Screw 3x25
2pcs
6
ElConnector02
2pcs